TOSOT

WWW.TOSOTCOMFORT.COM

SPLIT TYPE

SUBMITTAL

MODEL:
TWH24AT19D6DI
TWH24AT19D6DO

System Performance		
Cooling (Min – Max)	Btu/h	5,800 – 26,270
Cooling Capacity @95˚F	Btu/h	22,000
Heating (Min – Max)	Btu/h	5,400 – 26,600
Heating Capacity @47˚F	Btu/h	24,000
Heating Capacity @17˚F	Btu/h	
Heating Capacity Max @5˚F	Btu/h	
SEER2		19.0
EER2		11.9
HSPF2		8.5
COP @5˚F		
COP @47˚F		3.6
Cooling Temperature Range	˚F	0 – 118
Heating Temperature Range	˚F	–13 – 75
Refrigerant Type		R32
Indoor Unit		**TWH24AT19D6DI**
Air Flow (Min – Max)	CFM	412 – 677
Sound Pressure Level (Min – Max)	dB(A)	36 – 51
Dehumidification	pt/hr	5.28
External Dimensions (W x H x D)	in	42–7/16 x 13–7/64 x 9–11/16
Package Dimensions (W x H x D)	in	44–39/64 x 16–19/64 x 13–7/64
Net Weight	lbs	33.1
Gross Weight	lbs	39.7
Outdoor Unit		**TWH24AT19D6DO**
Sound Pressure Level (Min – Max)	dB(A)	58
External Dimensions (W x H x D)	in	37–23/32 x 25–63/64 x 15–53/64
Package Dimensions (W x H x D)	in	40–5/8 x 29–1/64 x 17–61/64
Net Weight	lbs	93.7
Gross Weight	lbs	103.6

Refrigerant Piping		
Refrigerant Charge	oz	42.3
Additional Charge	oz/ft	0.1
Line Set Size (Liquid – Gas) – Flared Connections	in	1/4 – 1/2
Pipe–Charge Length	ft	25
Pipe Length (Min – Max)	ft	10 – 131
Max Pipe Elevation	ft	82
Electrical		
Power Supply		208–230V / 1Ph / 60Hz (Powered by the Outdoor Unit)
Voltage Range (Min – Max)	VAC	187 – 253
Rated Current – Cooling	A	11
Rated Current – Heating	A	12
MCA	A	15
MOCP	A	20
Suggested Breaker Size	A	15
Main Power Wire Size	AWG	Per Local Code
Interconnecting Wire Size	AWG	14/4
System Features		
Inverter Type		G10
Ultra Low Frequency Torque Control		Yes
Power Factor Correction		Yes
Compressor Type		High Efficiency Rotary
Basepan With Electric Heater		Yes
Compressor With Electric Heater		Yes
Outdoor Fin Coating (Color:Blue)		Acrylic–Resin/Anti–Corrosive
Intelligent Defrosting		Yes
Force Defrosting		Yes
Intelligent Preheating		Yes
Low Voltage Startup		Yes
Memory/Power Failure Recovery		Yes
Self Diagnosis		Yes
Wired Controller Interface (XE71)		Yes
WiFi Included		Yes
Indoor Fan Type		Crossflow
Multi Fan Speeds		4 Speeds
Indoor Unit Display		Yes
Auxilary Electrical Heater		No
Ventilation (Outdoor Air)		No

System Features	
Auto Mode	Yes
Auto Fan	Yes
Manual Horizontal Swing	Yes
Auto Swing (Vertical Auto Swing)	Yes
Clock on Remote Controller	Yes
Dry Mode	Yes
Dry Anti-Mildew (X-Fan) Mode	Yes
Energy Saving Mode	Yes
Dirty Filter Alert	No
I Feel Function	Yes
Lock on Remote Controller	Yes
Quiet Mode	No
Room Temperature Display	Yes
Sleep Mode	Yes
Timer Mode	Yes
Turbo Mode	Yes
Display On/Off Control	Yes
Freeze Guard Mode (46˚F)	Yes

TWH24AT19D6DI DImensions (in)	
W	42 7/16
H	13 7/64
D	9 11/16
W1	6 15/64
W2	22 7/64
W3	10 5/32

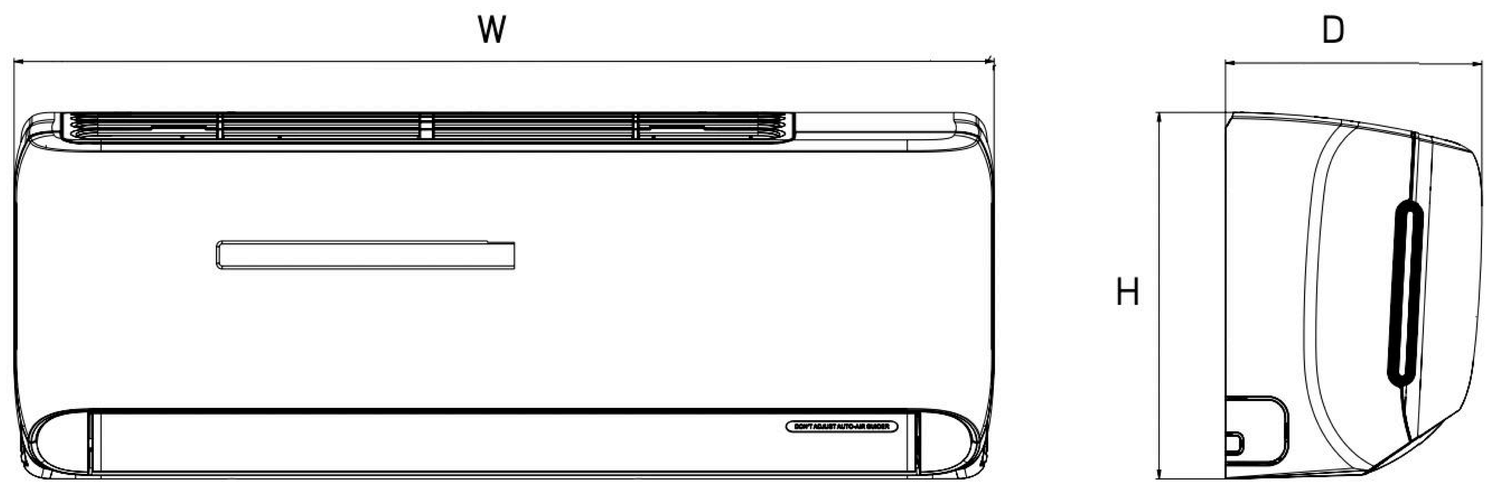

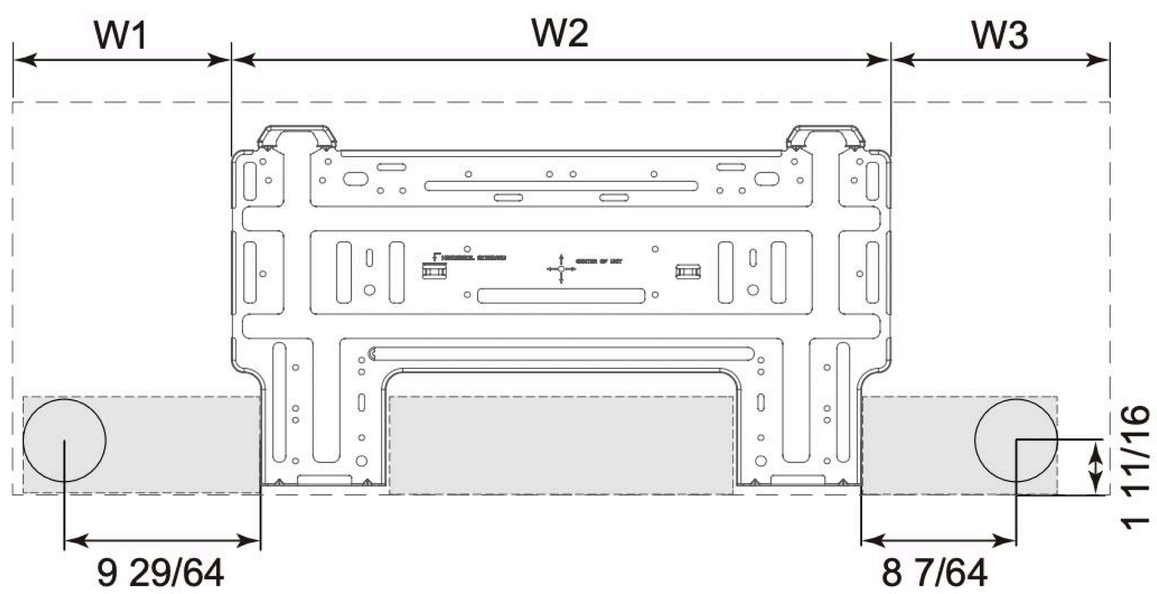

TWH18AT19D6DI DImensions (in)

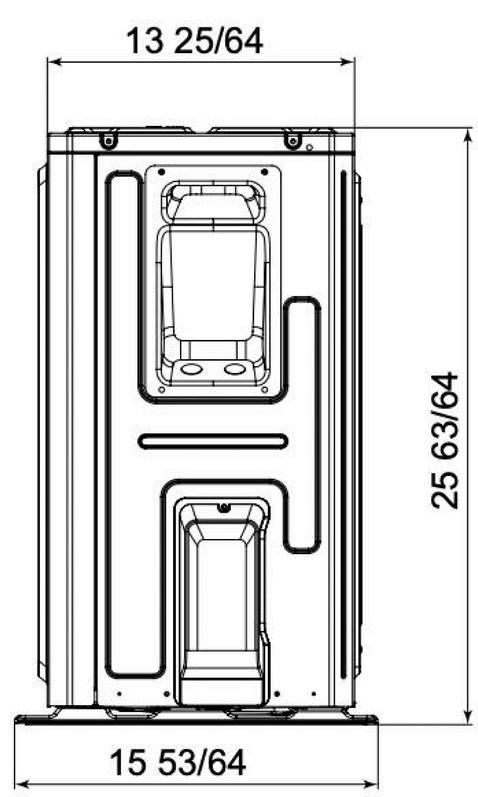

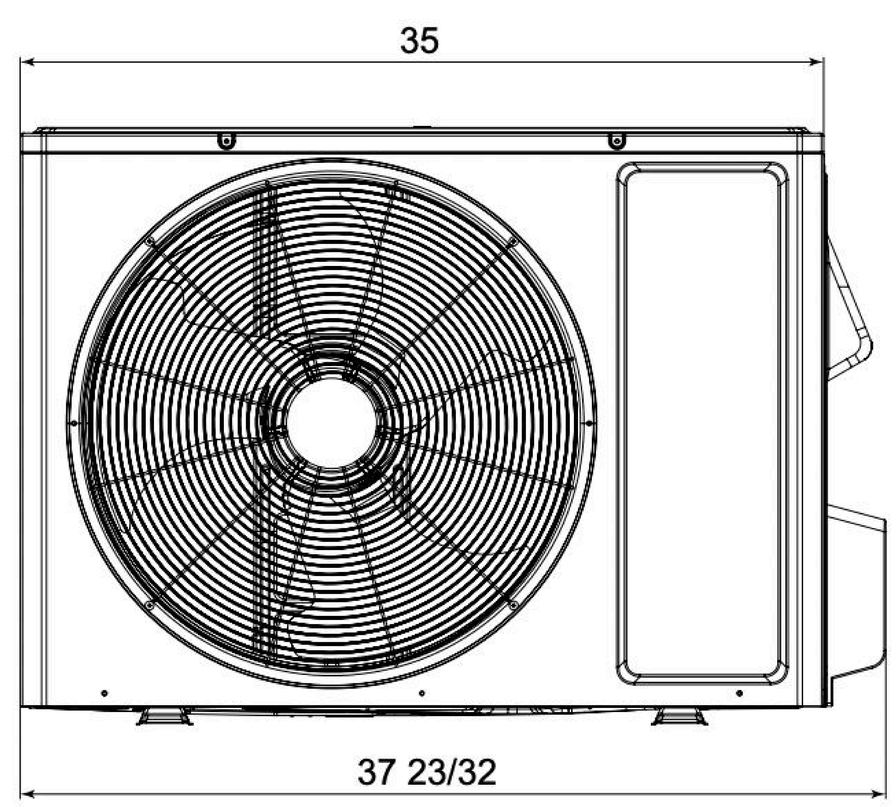

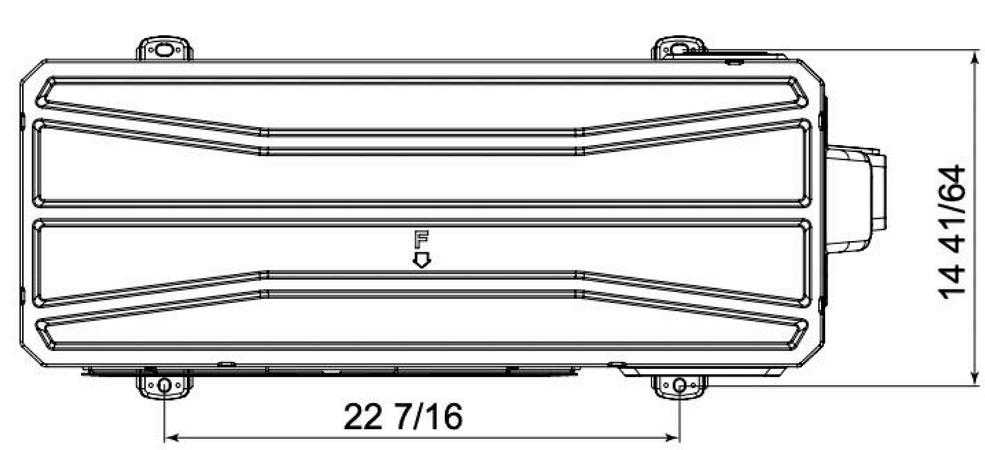

Clearances

Indoor Unit – Minimum clearance

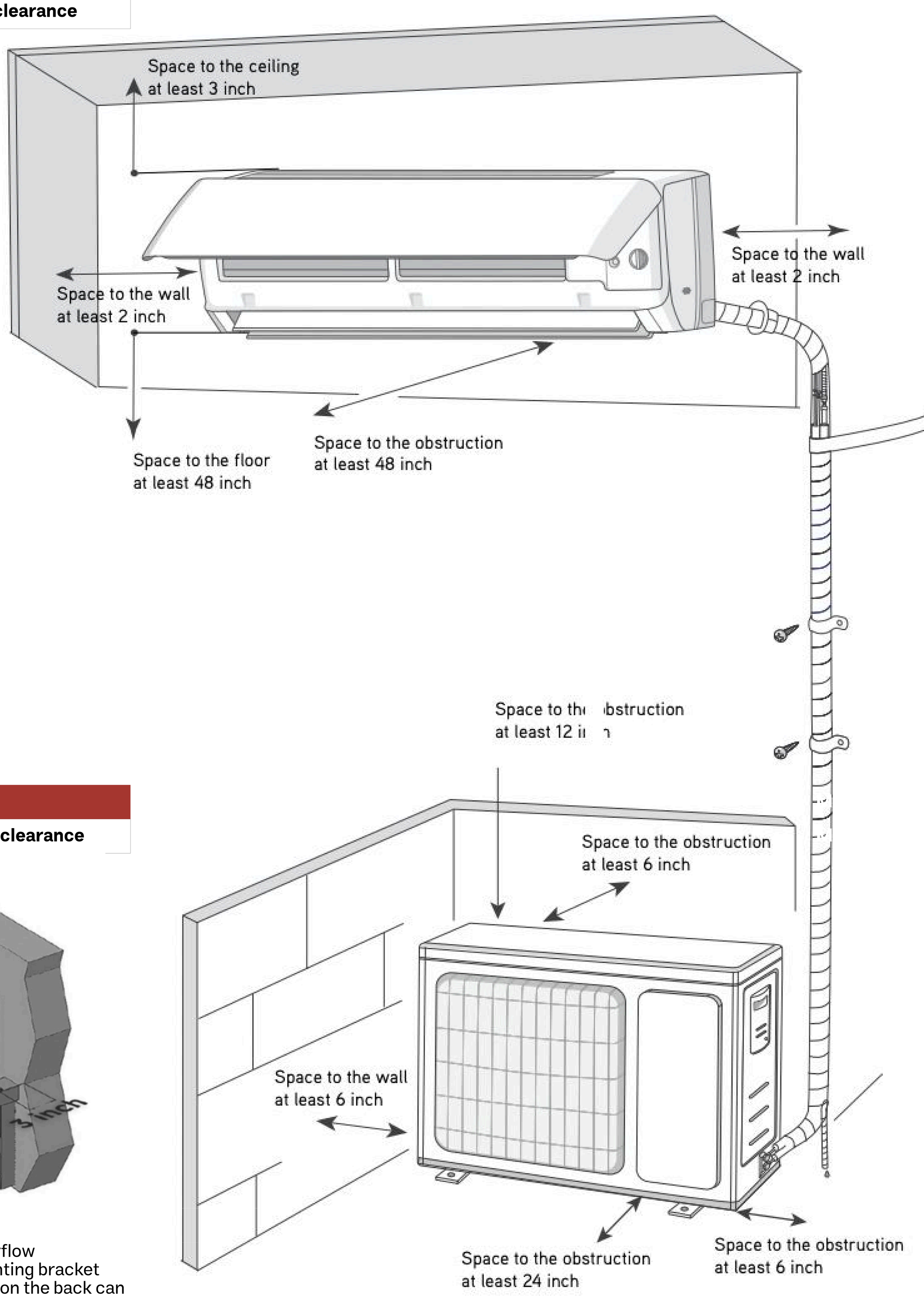

Clearances

Outdoor Unit – Minimum clearance

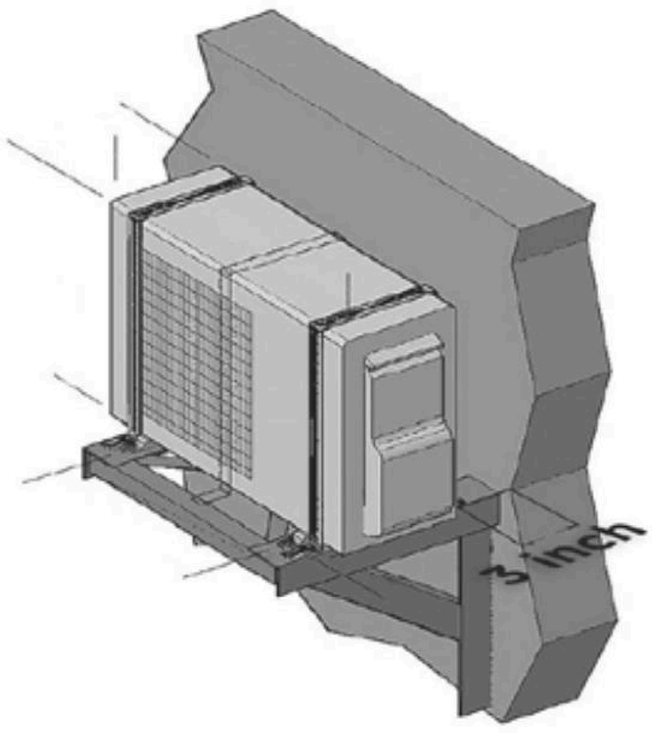

NOTE:

If bottom of the unit is free of airflow obstructions similar to the mounting bracket figure, the clearance to the wall on the back can be reduced to 3 inches.