SPLIT TYPE **SUBMITTAL**

MODEL: TM24D6MO

System Performance		Outdoor Unit
Cooling Temperature Range	˚F	-22 – 118
Heating Temperature Range	˚F	-22 – 75
Refrigerant Type		R32
Compressor Type		GREE G-10 / 2 – STAGE INVERTER
Sound Pressure Level	dB(A)	58
External Dimensions (W x H x D)	in	37-61/64 × 25-63/64 × 15-53/64
Package Dimensions (W x H x D)	in	40-5/8 × 29-1/64 × 17-61/64
Net Weight	lbs	112.5
Gross Weight	lbs	122.4
Refrigerating Piping		
Additional Charge	oz/ft	0.2
Port A Size (Liquid – Gas)	in	1/4 – 3/8
Port B Size (Liquid – Gas)	in	1/4 – 3/8
Port C Size (Liquid – Gas)	in	1/4 – 3/8
Port D Size (Liquid – Gas)	in	
Port E Size (Liquid – Gas)	in	
Pipe-Charge Length	ft	98
Pipe Length (Min – Max)	ft	10 – 197
Pipe Length to Furthest Indoor Unit	ft	66
Max Pipe Elevation	ft	49
Electrical		
Power Supply		208-230V / 1Ph / 60Hz
Voltage Range (Min – Max)	VAC	187 – 253
Rated Current – Cooling	A	14
Rated Current – Heating	A	14.8
MOCP	A	25
Suggested Breaker Size	A	20
Main Power Wire Size	AWG	Per Local Code
Interconnecting Wire Size	AWG	14/4

System Features	
Inverter Type	G10
Ultra Low Frequency Torque Control	Yes
Power Factor Correction	Yes
Compressor Type – Inverter	High Efficiency Rotary
Basepan with Electric Heater	Yes
Indoor & Outdoor Fin Coating (Blue Fin)	Yes
Intelligent Defrosting	Yes
Intelligent Preheating	Yes
Low Voltage Startup	Yes
Memory/Power Failure Recovery	Yes
Self Diagnosis	Yes

System Performance		Non-Ducted Indoor Units
Cooling (Min – Max)	Btu/h	7,500 – 31,400
Cooling Capacity @95˚F	Btu/h	24,000
Heating (Min – Max)	Btu/h	7,500 – 31,400
Heating Capacity @47˚F	Btu/h	24,000
Heating Capacity @17˚F	Btu/h	23,600
Heating Capacity Max @5˚F	Btu/h	21,600
SEER2		21
EER2		13.3
HSPF2		10.0
COP @5˚F		2.0
COP @47˚F		3.9

System Performance		Ducted Indoor Units
Cooling (Min – Max)	Btu/h	7,500 – 31,400
Cooling Capacity @95˚F	Btu/h	24,000
Heating (Min – Max)	Btu/h	7,500 – 31,400
Heating Capacity @47˚F	Btu/h	24,000
Heating Capacity @17˚F	Btu/h	22,000
Heating Capacity Max @5˚F	Btu/h	21,600
SEER2		18.0
EER2		12.0
HSPF2		8.0
COP @5˚F		1.86

TOSOT

WWW.TOSOTCOMFORT.COM

System Performance		Mixed Ducted and Non-Ducted Indoor Units
Cooling (Min – Max)	Btu/h	7,500 – 31,400
Cooling Capacity @95˚F	Btu/h	24,000
Heating (Min – Max)	Btu/h	7,500 – 31,400
Heating Capacity @47˚F	Btu/h	24,000
Heating Capacity @17˚F	Btu/h	23,000
Heating Capacity Max @5˚F	Btu/h	21,600
SEER2		19.0
EER2		12.2
HSPF2		9.0
COP @5˚F		1.8

Model Number	POSSIBLE COMBINATIONS	COOLING CAPACITY (Btu/h)					HEATING CAPACITY (Btu/h)				
		ZONE1	ZONE2	ZONE3	ZONE4	ZONE5	ZONE1	ZONE2	ZONE3	ZONE4	ZONE5
TM24D6MO	9K+9K	9,000	9,000				9,000	9,000			
TM24D6MO	9K+12K	9,000	12,000				9,000	12,000			
TM24D6MO	9K+18K	8,000	16,000				8,000	16,000			
TM24D6MO	12K+12K	12,000	12,000				12,000	12,000			
TM24D6MO	12K+18K	9,600	14,400				9,600	14,400			
TM24D6MO	18K+18K	12,000	12,000				12,000	12,000			
TM24D6MO	9K+9K+9K	8,000	8,000	8,000			8,000	8,000	8,000		
TM24D6MO	9K+9K+12K	7,200	7,200	9,600			7,200	7,200	9,600		
TM24D6MO	9K+9K+18K	6,000	6,000	12,000			6,000	6,000	12,000		
TM24D6MO	9K+12K+12K	6,545	8,727	8,727			6,545	8,727	8,727		
TM24D6MO	12K+12K+12K	8,000	8,000	8,000			8,000	8,000	8,000		

TM24D6MO Dimensions

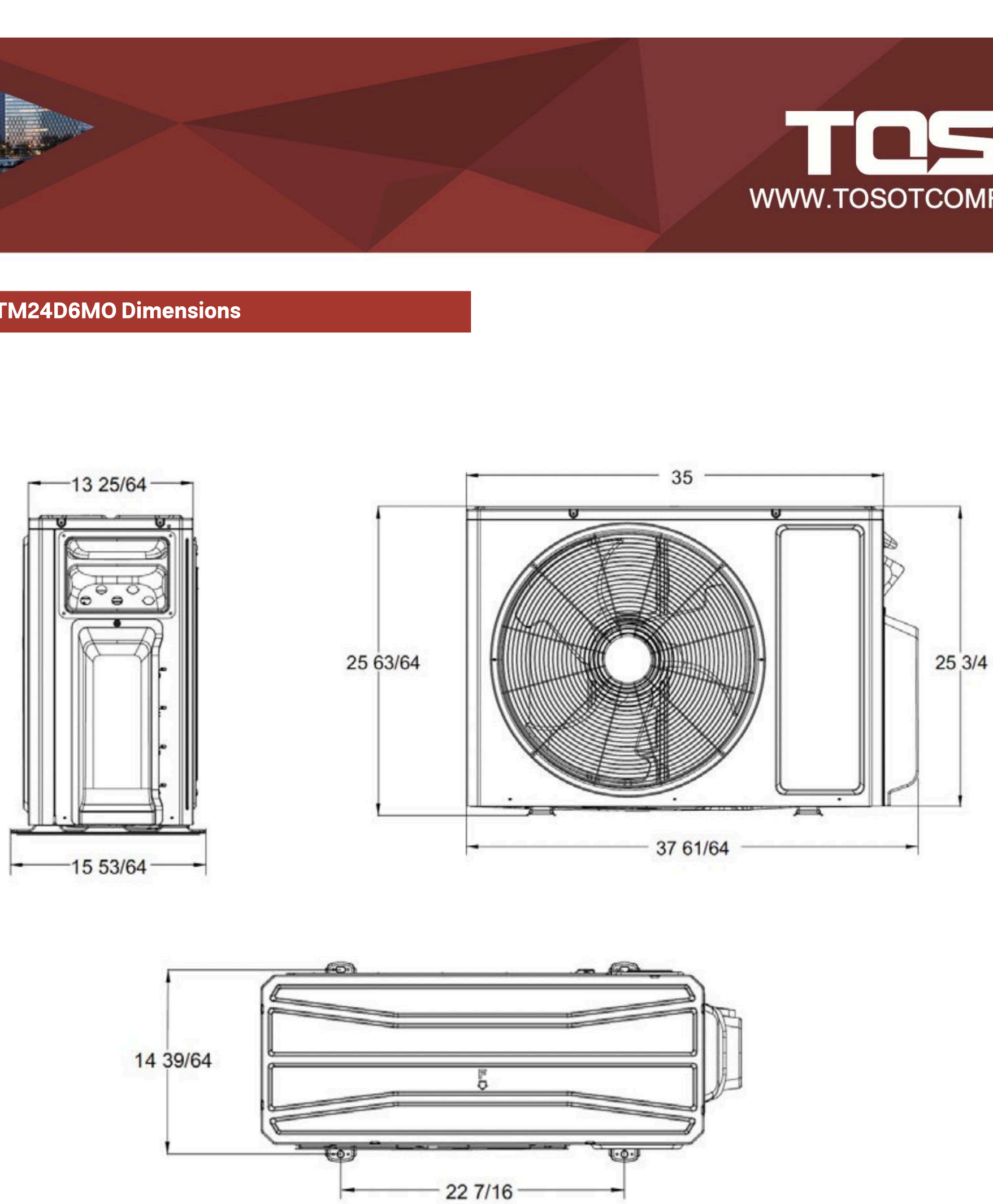

Clearances

Outdoor Unit – Minimum clearance

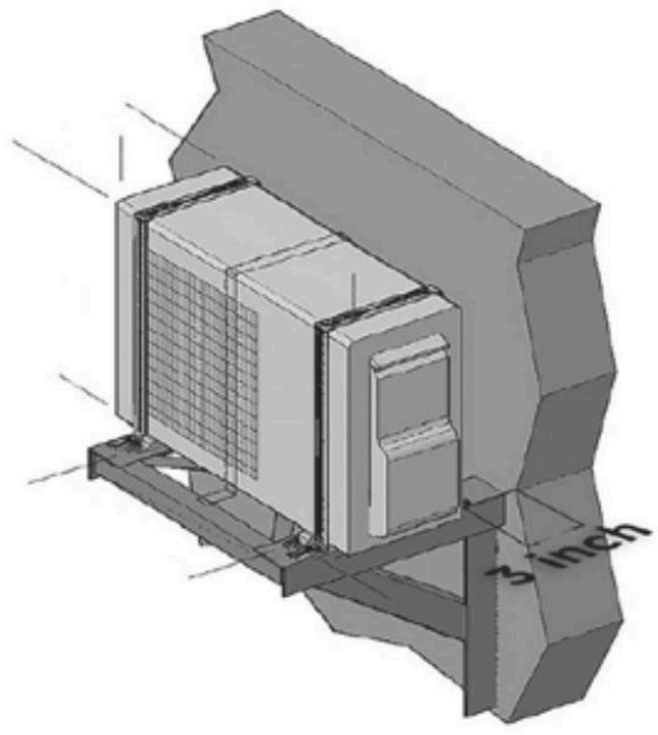

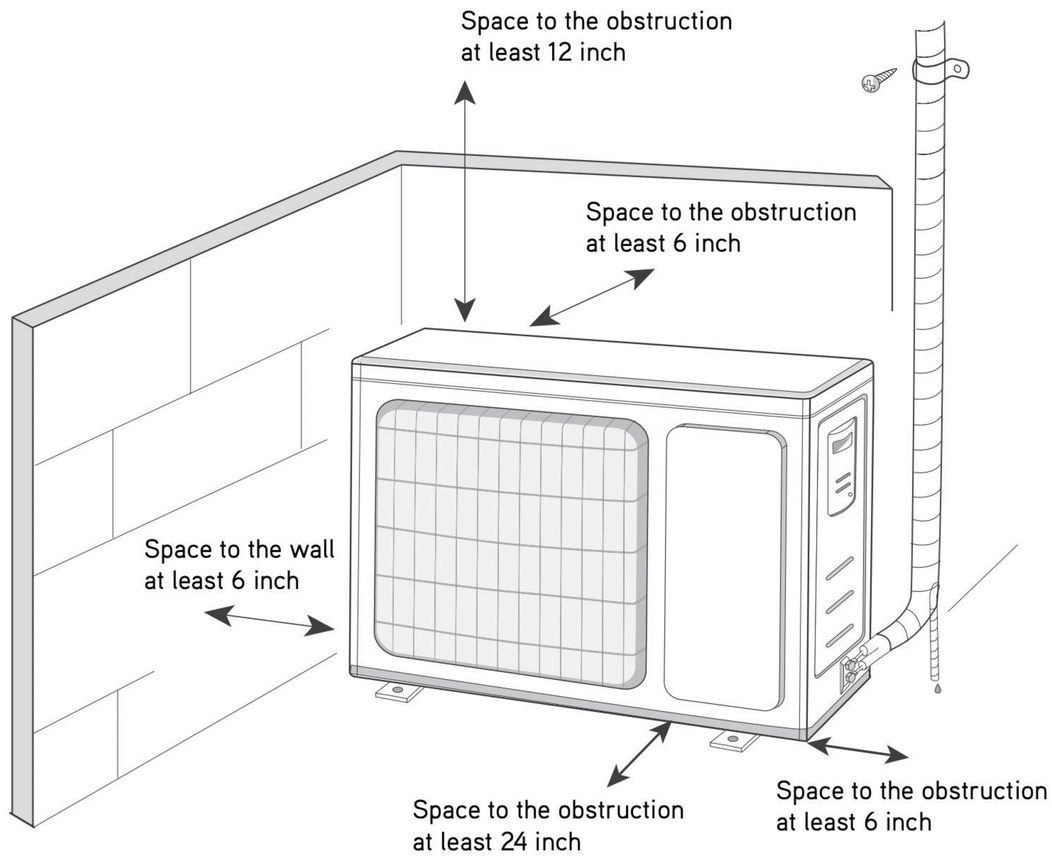

NOTE:

If bottom of the unit is free of airflow obstructions similar to the mounting bracket figure, the clearance to the wall on the back can be reduced to 3 inches.