TOSOT
WWW.TOSOTCOMFORT.COM

SPLIT TYPE SUBMITTAL

MODEL: TM42D6MO

System Performance		Outdoor Unit
Cooling Temperature Range	°F	-22 – 118
Heating Temperature Range	°F	-22 – 75
Refrigerant Type		R32
Compressor Type		GREE G-10 / 2 – STAGE INVERTER
Sound Pressure Level	dB(A)	63
External Dimensions (W x H x D)	in	40-10/64 × 32-33/64 × 16-52/64
Package Dimensions (W x H x D)	in	43-1/32 × 34-27/32 × 19-9/16
Net Weight	lbs	178.6
Gross Weight	lbs	191.8
Refrigerating Piping		
Additional Charge	oz/ft	0.2
Port A Size (Liquid – Gas)	in	1/4 – 3/8
Port B Size (Liquid – Gas)	in	1/4 – 3/8
Port C Size (Liquid – Gas)	in	1/4 – 3/8
Port D Size (Liquid – Gas)	in	1/4 – 3/8
Port E Size (Liquid – Gas)	in	1/4 – 3/8
Pipe-Charge Length	ft	164
Pipe Length (Min – Max)	ft	10 – 328
Pipe Length to Furthest Indoor Unit	ft	82
Max Pipe Elevation	ft	82
Electrical		
Power Supply		208-230V / 1Ph / 60Hz
Voltage Range (Min – Max)	VAC	187 – 253
Rated Current – Cooling	A	21.7
Rated Current – Heating	A	22.6
MOCP	A	35
Suggested Breaker Size	A	30
Main Power Wire Size	AWG	Per Local Code
Interconnecting Wire Size	AWG	14/4

TOSOT
WWW.TOSOTCOMFORT.COM

System Features	
Inverter Type	G10
Ultra Low Frequency Torque Control	Yes
Power Factor Correction	Yes
Compressor Type – Inverter	High Efficiency Rotary
Basepan with Electric Heater	Yes
Indoor & Outdoor Fin Coating (Blue Fin)	Yes
Intelligent Defrosting	Yes
Intelligent Preheating	Yes
Low Voltage Startup	Yes
Memory/Power Failure Recovery	Yes
Self Diagnosis	Yes

System Performance		Non-Ducted Indoor Units
Cooling (Min – Max)	Btu/h	8,870 – 44,300
Cooling Capacity @95˚F	Btu/h	42,000
Heating (Min – Max)	Btu/h	8,870 – 46,000
Heating Capacity @47˚F	Btu/h	42,000
Heating Capacity @17˚F	Btu/h	40,000
Heating Capacity Max @5˚F	Btu/h	37,800
SEER2		21
EER2		13.0
HSPF2		10.0
COP @5˚F		2.1
COP @47˚F		3.9

System Performance		Ducted Indoor Units
Cooling (Min – Max)	Btu/h	8,870 – 40,900
Cooling Capacity @95˚F	Btu/h	36,000
Heating (Min – Max)	Btu/h	8,870 – 44,300
Heating Capacity @47˚F	Btu/h	36,000
Heating Capacity @17˚F	Btu/h	36,000
Heating Capacity Max @5˚F	Btu/h	33,000
SEER2		18.0
EER2		11.7
HSPF2		8.0
COP @5˚F		1.9

TOSOT

WWW.TOSOTCOMFORT.COM

System Performance		Mixed Ducted and Non-Ducted Indoor Units
Cooling (Min – Max)	Btu/h	8,870 – 44,300
Cooling Capacity @95˚F	Btu/h	42,000
Heating (Min – Max)	Btu/h	8,870 – 46,000
Heating Capacity @47˚F	Btu/h	42,000
Heating Capacity @17˚F	Btu/h	40,000
Heating Capacity Max @5˚F	Btu/h	37,000
SEER2		19.0
EER2		12.2
HSPF2		9.0
COP @5˚F		1.8

Model Number	POSSIBLE COMBINATIONS	COOLING CAPACITY (Btu/h)					HEATING CAPACITY (Btu/h)				
		ZONE1	ZONE2	ZONE3	ZONE4	ZONE5	ZONE1	ZONE2	ZONE3	ZONE4	ZONE5
TM42D6MO	9K+12K	9,000	12,000				9,000	12,000			
TM42D6MO	9K+18K	9,000	18,000				9,000	18,000			
TM42D6MO	9K+24K	9,000	24,000				9,000	24,000			
TM42D6MO	12K+12K	12,000	12,000				12,000	12,000			
TM42D6MO	12K+18K	12,000	18,000				12,000	18,000			
TM42D6MO	12K+24K	12,000	24,000				12,000	24,000			
TM42D6MO	18K+18K	18,000	18,000				18,000	18,000			
TM42D6MO	18K+24K	18,000	24,000				18,000	24,000			
TM42D6MO	24K+24K	21,000	21,000				21,000	21,000			
TM42D6MO	9K+9K+9K	9,000	9,000	9,000			9,000	9,000	9,000		
TM42D6MO	9K+9K+12K	9,000	9,000	12,000			9,000	9,000	12,000		
TM42D6MO	9K+9K+18K	9,000	9,000	18,000			9,000	9,000	18,000		
TM42D6MO	9K+9K+24K	9,000	9,000	24,000			9,000	9,000	24,000		
TM42D6MO	9K+12K+12K	9,000	12,000	12,000			9,000	12,000	12,000		
TM42D6MO	9K+12K+18K	9,000	12,000	18,000			9,000	12,000	18,000		
TM42D6MO	9K+12K+24K	8,400	11,200	22,400			8,400	11,200	22,400		
TM42D6MO	9K+18K+18K	8,400	16,800	16,800			8,400	16,800	16,800		
TM42D6MO	9K+18K+24K	7,412	14,824	14,824			6,353	14,824	14,824		
TM42D6MO	9K+24K+24K	6,632	17,684	17,684			6,632	17,684	17,684		
TM42D6MO	12K+12K+12K	12,000	12,000	12,000			12,000	12,000	12,000		
TM42D6MO	12K+12K+18K	12,000	12,000	12,000			12,000	12,000	12,000		
TM42D6MO	12K+12K+24K	10,500	10,500	21,000			10,500	10,500	21,000		
TM42D6MO	12K+18K+18K	10,500	15,750	15,750			10,500	15,750	15,750		
TM42D6MO	12K+18K+24K	9,333	14,000	18,667			9,333	14,000	18,667		
TM42D6MO	12K+24K+24K	8,400	16,800	16,800			8,400	16,800	16,800		

Model Number	POSSIBLE COMBINATIONS	COOLING CAPACITY (Btu/h)					HEATING CAPACITY (Btu/h)				
		ZONE1	ZONE2	ZONE3	ZONE4	ZONE5	ZONE1	ZONE2	ZONE3	ZONE4	ZONE5
TM42D6MO	18K+18K+18K	14,000	14,000	14,000			14,000	14,000	14,000		
TM42D6MO	18K+18K+24K	12,600	12,600	16,800			12,600	12,600	16,800		
TM42D6MO	9K+9K+9K+9K	9,000	9,000	9,000	9,000		9,000	9,000	9,000	9,000	
TM42D6MO	9K+9K+9K+12K	9,000	9,000	9,000	12,000		9,000	9,000	9,000	12,000	
TM42D6MO	9K+9K+9K+18K	8,400	8,400	8,400	16,800		8,400	8,400	8,400	16,800	
TM42D6MO	9K+9K+9K+24K	7,412	7,412	7,412	19,765		7,412	7,412	7,412	19,765	
TM42D6MO	9K+9K+12K+12K	9,000	9,000	12,000	12,000		9,000	9,000	12,000	12,000	
TM42D6MO	9K+9K+12K+18K	7,875	7,875	10,500	15,750		7,875	7,875	10,500	15,750	
TM42D6MO	9K+9K+12K+24K	7,000	7,000	9,333	18,667		7,000	7,000	9,333	18,667	
TM42D6MO	9K+9K+18K+18K	7,000	7,000	14,000	14,000		7,000	7,000	14,000	14,000	
TM42D6MO	9K+9K+18K+24K	6,300	6,300	12,600	16,800		6,300	6,300	12,600	16,800	
TM42D6MO	9K+12K+12K+12K	8,400	11,200	11,200	11,200		8,400	11,200	11,200	11,200	
TM42D6MO	9K+12K+12K+18K	7,412	9,882	9,882	14,824		7,412	9,882	9,882	14,824	
TM42D6MO	9K+12K+12K+24K	6,632	8,842	8,842	17,684		6,632	8,842	8,842	17,684	
TM42D6MO	9K+12K+18K+18K	6,632	8,842	13,263	13,263		6,632	8,842	13,263	13,263	
TM42D6MO	9K+12K+18K+24K	6,000	8,000	12,000	16,000		6,000	8,000	12,000	16,000	
TM42D6MO	9K+18K+18K+18K	6,000	12,000	12,000	12,000		6,000	12,000	12,000	12,000	
TM42D6MO	12K+12K+12K+12K	10,500	10,500	10,500	10,500		10,500	10,500	10,500	10,500	
TM42D6MO	12K+12K+12K+18K	9,333	9,333	9,333	14,000		9,333	9,333	9,333	14,000	
TM42D6MO	12K+12K+12K+24K	8,400	8,400	8,400	16,800		8,400	8,400	8,400	16,800	
TM42D6MO	12K+12K+18K+18K	8,400	8,400	12,600	12,600		8,400	8,400	12,600	12,600	
TM42D6MO	9K+9K+9K+9K+9K	8,400	8,400	8,400	8,400	8,400	8,400	8,400	8,400	8,400	8,400
TM42D6MO	9K+9K+9K+9K+12K	7,875	7,875	7,875	7,875	10,500	7,875	7,875	7,875	7,875	10,500
TM42D6MO	9K+9K+9K+9K+18K	7,000	7,000	7,000	7,000	7,000	7,000	7,000	7,000	7,000	14,000
TM42D6MO	9K+9K+9K+9K+24K	6,300	6,300	6,300	6,300	16,800	6,300	6,300	6,300	6,300	16,800
TM42D6MO	9K+9K+9K+12K+12K	7,412	7,412	7,412	9,882	9,882	7,412	7,412	7,412	9,882	9,882
TM42D6MO	9K+9K+9K+12K+18K	6,632	6,632	6,632	8,842	13,263	6,632	6,632	6,632	8,842	13,263
TM42D6MO	9K+9K+9K+12K+24K	6,000	6,000	6,000	8,000	16,000	6,000	6,000	6,000	8,000	16,000
TM42D6MO	9K+9K+9K+18K+18K	6,000	6,000	6,000	12,000	12,000	6,000	6,000	6,000	12,000	12,000
TM42D6MO	9K+9K+12K+12K+12K	7,000	7,000	9,333	9,333	9,333	7,000	7,000	9,333	9,333	9,333
TM42D6MO	9K+9K+12K+12K+18K	6,300	6,300	8,400	8,400	12,600	6,300	6,300	8,400	8,400	12,600
TM42D6MO	9K+12K+12K+12K+12K	6,632	8,842	8,842	8,842	8,842	6,632	8,842	8,842	8,842	8,842
TM42D6MO	9K+12K+12K+12K+18K	6,000	8,000	8,000	8,000	12,000	6,000	8,000	8,000	8,000	12,000
TM42D6MO	12K+12K+12K+12K+12K	8,400	8,400	8,400	8,400	8,400	8,400	8,400	8,400	8,400	8,400

TM42D6MO Dimensions

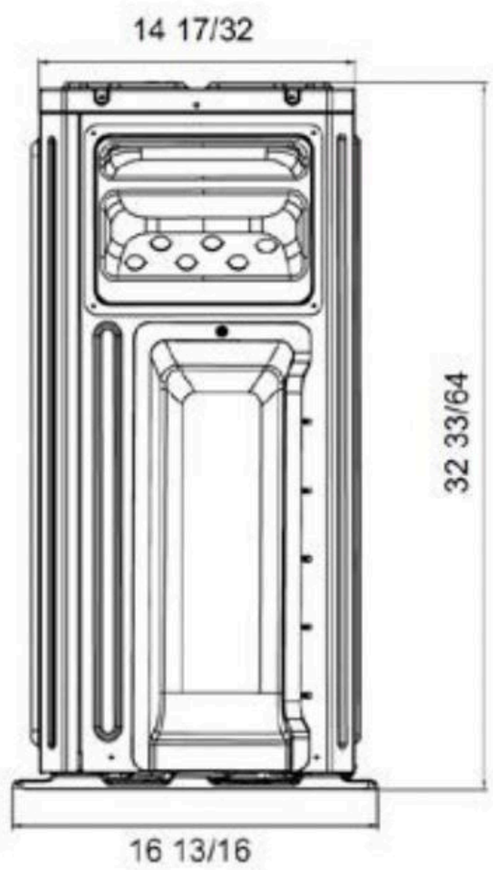

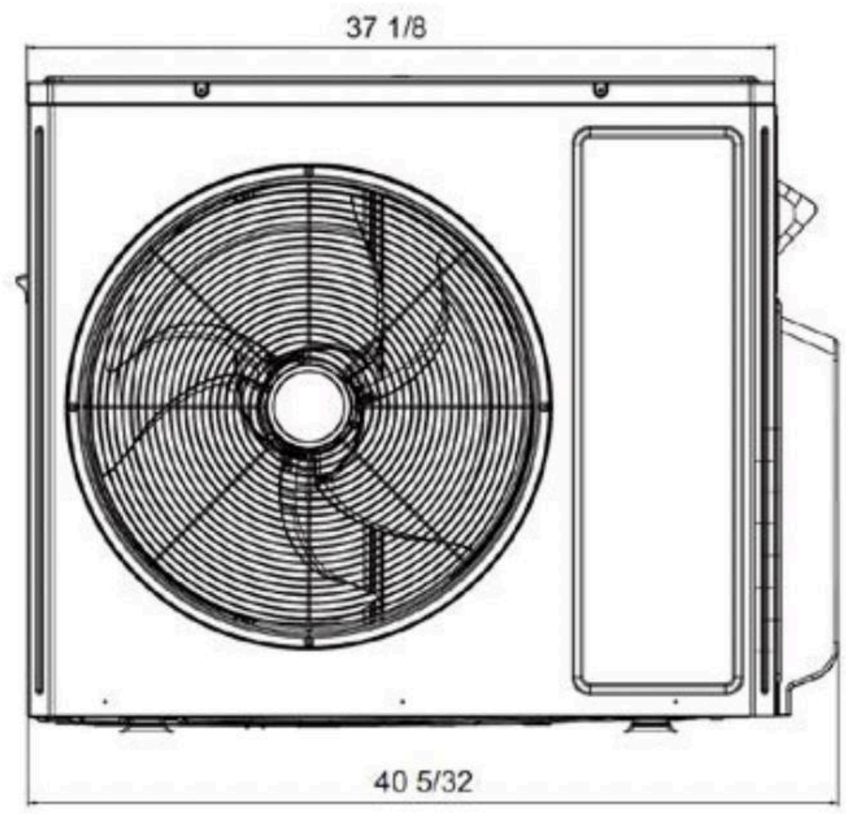

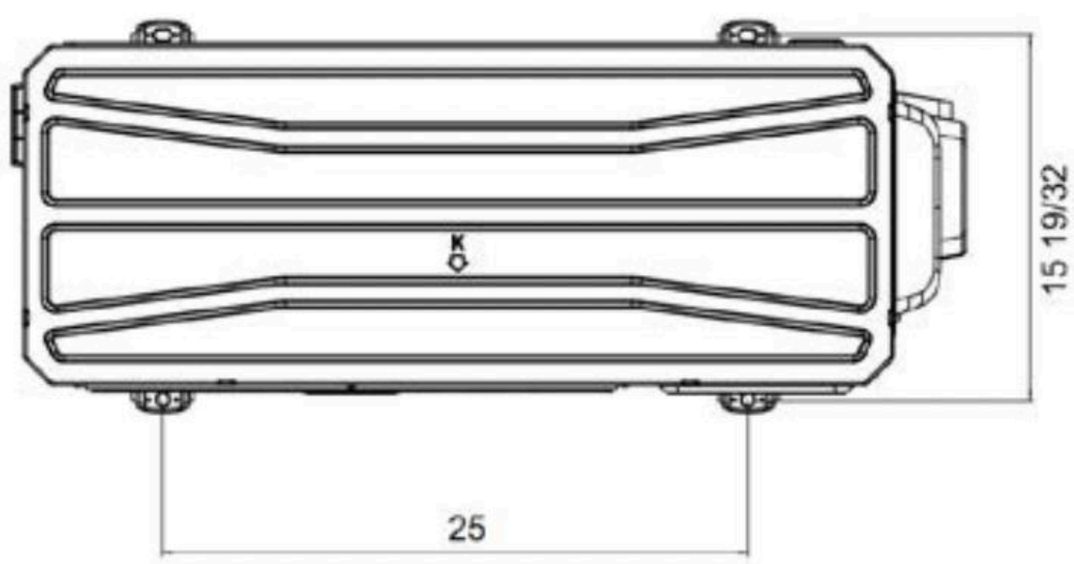

Clearances

Outdoor Unit – Minimum clearance

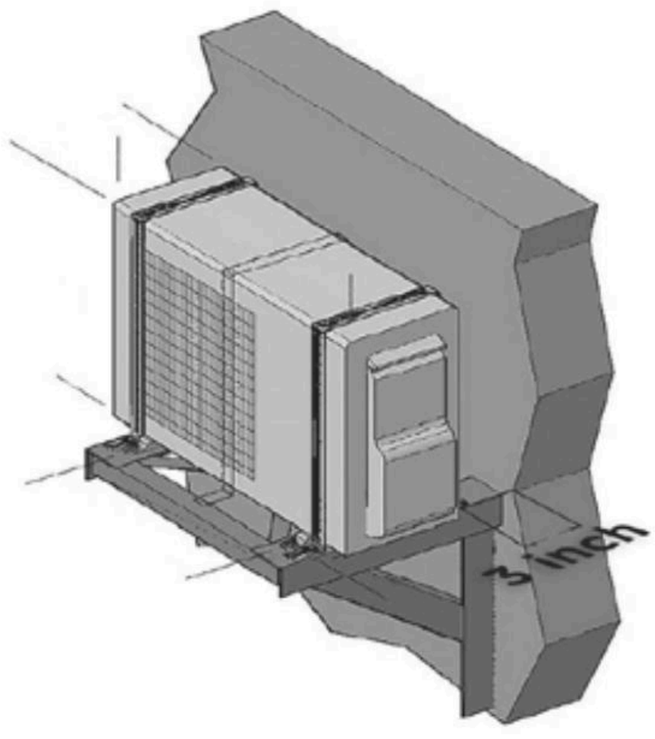

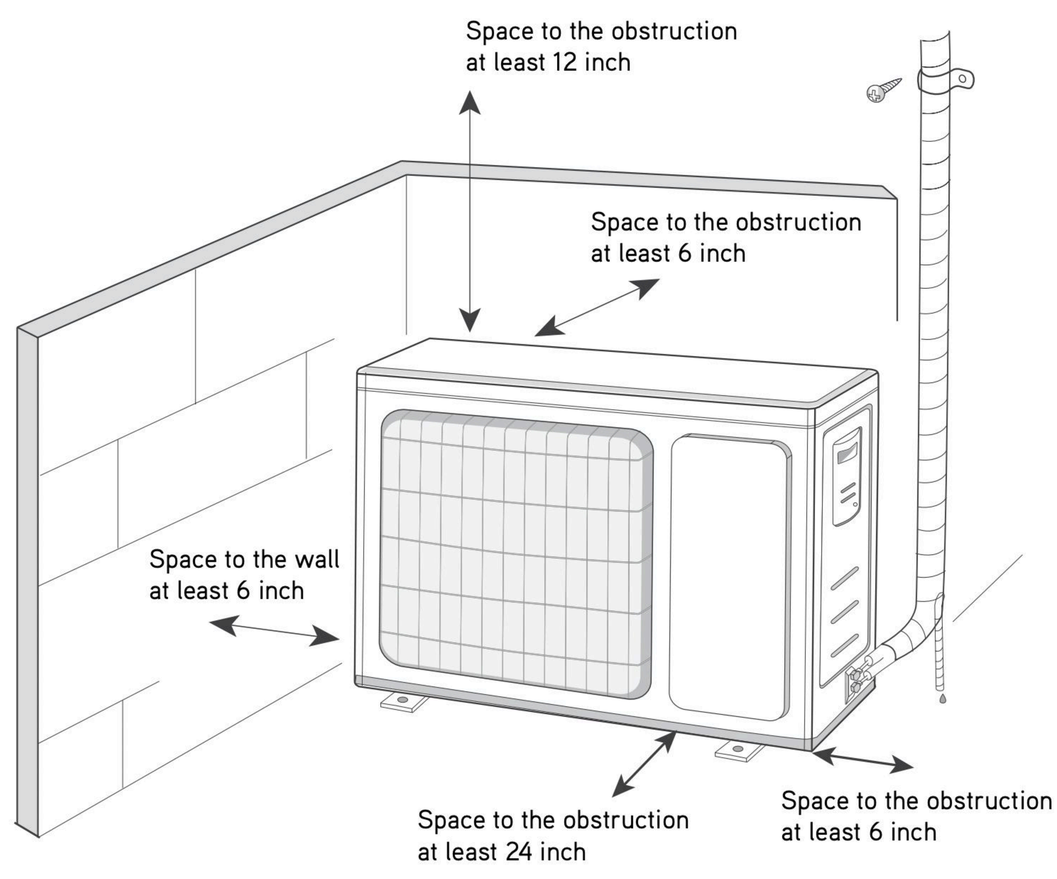

NOTE:

If bottom of the unit is free of airflow obstructions similar to the mounting bracket figure, the clearance to the wall on the back can be reduced to 3 inches.